PrAMC QorIQ P4040 and P4080

AMC719

KEY FEATURES

- Single-width, mid-height (option for full-height) per AMC.0
- Processor AMC with Freescale™ QorIQ P4040 and P4080
- SRIO on ports 4-11
- Dual 10GbE with SFP+ interface
- Up to 16GBytes of DDR-III memory with ECC
- Dual GbE per AMC.2 specification on ports 0 and 1
- 32Mbytes of NOR Flash
- 8Mbytes of SPI Flash and 512KB of I2C Flash
- 256 Mbytes of NAND Flash
- IPMI 2.0 compliant
- RoHS compliant
- OS support for Linux and VxWorks

The AMC719 is a Processor AMC (PrAMC) in a single-width, mid-height AdvancedMC™ (AMC) form factor based on the Freescale P4040 and P4080. The module follows the AMC.4 and AMC.2 specifications. The SRIO runs as dual x4. The module has option for up to 16GBytes of DDR-III memory with ECC.

The AMC719 provides Dual 10GbE via SFP+.

The module provides Dual GbE to the rear per AMC.2 specification on ports 0 and 1. It has single GbE to the front which is muxed with port 1.

VadaTech Incorporated • 198 N. Gibson RD Henderson, NV 89014 • Tel: (702) 896-3337 • Fax (702) 896-0332

Email: info@vadatech.com • www.vadatech.com

SPECIFICATIONS

Architecture		
Physical	Dimensions	Single-Width, Mid-Height (Full-Height options)
		Width: 2.89 in. (73.5 mm)
		Depth: 7.11 in. (180.6 mm)
Product Type	AMC Processor	Freescale P4040 and P4080 @ 1.2GHz or 1.5GHz
Standards		
AMC	Type	AMC.2 and AMC.4
Module Management	IPMI	IPMI Version 2.0
SRIO	Lanes	Dual SRIO x4
Configuration		
Power	AMC719	35W with P4080 @ 1.5GHz
Environmental	Temperature	Operating Temperature: 0° to 60° C (Air flow requirement is to be greater than 600 LFM)
		Storage Temperature: -40° to +90° C
	Vibration	Operating 9.8 m/s2 (1.0G), 5-500Hz
	Shock	Operating 325G/2ms, 160G/1ms
	Relative Humidity	5 to 95 percent, non-condensing
Front Panel	LEDs	IPMI Management Control
		Activity/Link
		User LED
		Dual SFP+
		Single GbE via RJ-45
		CPU RS-232
		IPMI Management RS-232
	Mechanical	Hot Swap Ejector Handle
Software Support	Operating Systems	Linux and VxWorks
Other		
MTBF	MIL-217F Handbook > TBD MTTF Hrs.	
Certifications	Designed to meet FCC, CE and UL certifications where applicable	
Standards	VadaTech is certified to both the ISO9001:2000 and AS9100B:2004 standards	
Compliance	RoHS and NEBS	
Warranty	Two (2) years	
Trademarks and Logos	The VadaTech logo is a registered trademark of VadaTech, Inc. Other registered trademarks are the property of their respective owners. AdvancedMC™ and the AdvancedTCA™ logo are trademarks of the PCI Industrial Computers Manufacturers Group. All rights reserved. Specification subject to change without notice.	

VadaTech Incorporated • 198 N. Gibson RD Henderson, NV 89014 • Tel: (702) 896-3337 • Fax (702) 896-0332
Email: info@vadatech.com • www.vadatech.com

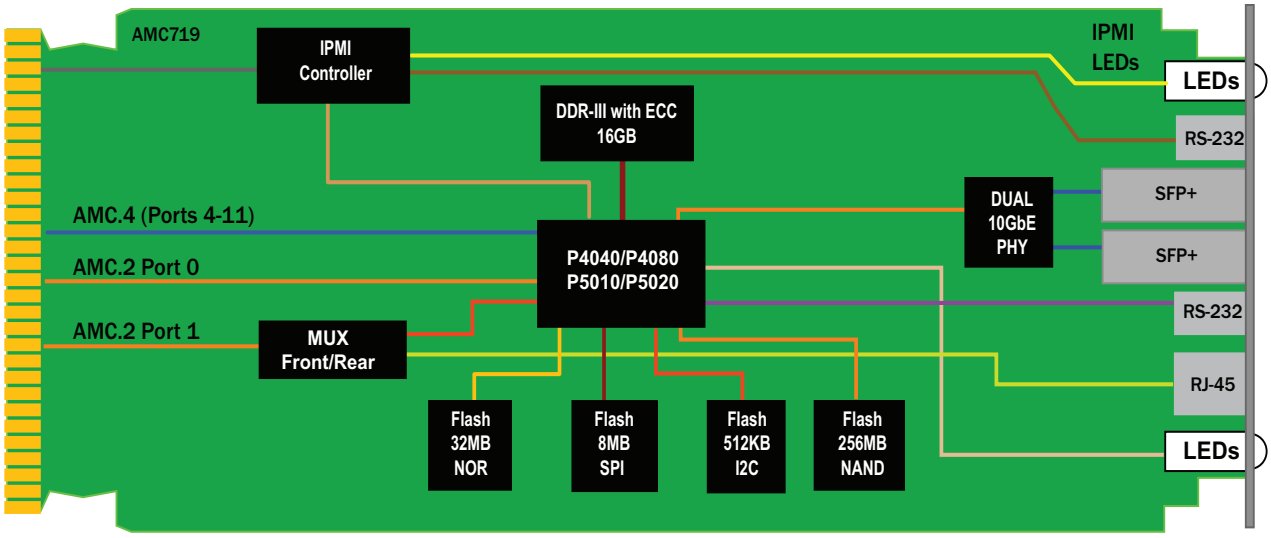

FIGURE 1. AMC719 Functional Block Diagram

FIGURE 2. AMC719 Front Panel

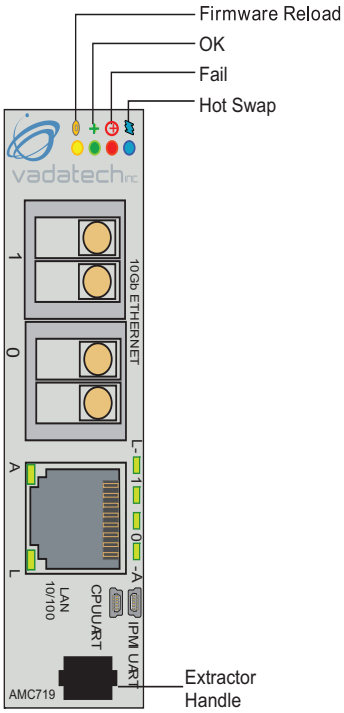

ORDERING OPTIONS

AMC719 - ABC - 0EF - 0HJ

A = CPU Speed

1 = P4040 @ 1.2GHz
2 = P4040 @ 1.5GHz
3 = P4080 @ 1.2GHz
4 = P4080 @ 1.5GHz

B = DDR-III ECC memory

0 = 4 GByte
1 = 8 GByte
2 = 16 GByte

C = Front Panel

1 = Reserved
2 = Mid-Height
3 = Full-Height

E = SFP+ Transceivers Port 0

0 = None
1= 10GBASE-SR
2 = Reserved
3 = 10GBASE-LRM
4 = 10GBASE-LR

F = SFP+ Transceivers Port 1

0 = None
1= 10GBASE-SR
2 = Reserved
3 = 10GBASE-LRM
4 = 10GBASE-LR

H = Operating Temp

0 = Commercial
1 = Industrial

J = Conformal Coating

0 = None
1 = Humiseal 1A33 Polyurethane
2 = Humiseal 1B31 Acrylic

Document No. 4FM430-05 REV. OI Date:. September 2016, Pass seven

vadatech inc
THE POWER OF VISION

VadaTech Incorporated • 198 N. Gibson RD Henderson, NV 89014 • Tel: (702) 896-3337 • Fax (702) 896-0332
Email: info@vadatech.com • www.vadatech.com