vadatech
THE POWER OF VISION

MZ523C – Mezzanine for MRT523, 12 Channel Optical Detector

Mezzanine for MRT523, Optical

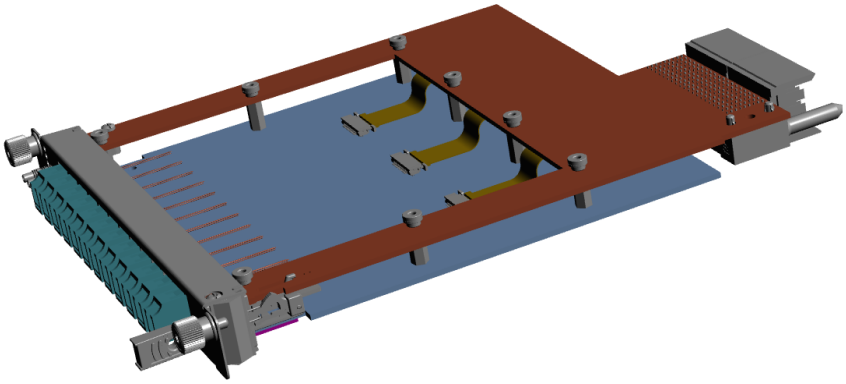

KEY FEATURES

- 12 optical detectors routed to mezzanine connector
- Per channel programmable gain, bandwidth and AC/DC coupling
- 0 µW to 160 µW optical input power
- 1310 nm to 1650 nm input wavelength
- Noise 4 x 10^{-4} of full scale at min gain
- Linearity < 1%
- Gain programmable 0 – 57 dB
- Sensitivity 0.7 W/A typical
- Mezzanine module for MRT523
- RoHS compliant

Benefits of Choosing VadaTech

- Low noise and high linearity for demanding applications
- Gain and anti-aliasing programmable via MRT523 for ease of use
- DAQ Series software support for out-of-the-box operation
- Electrical, mechanical, software, and system-level expertise in house
- Full system supply from industry leader
- AS9100 and ISO9001 certified company

The MZ523C is a mezzanine module for VadaTech's MRT523. The AMC/MRT523 combination provides 12-channel ADC 16-bit @ 125 MSPS. This mezzanine provides 12 optical detectors with low-noise and high linearity amplifiers, routing detected signals to the ADCs.

The MZ523C provides user-programmable selection, per channel, of input gain. The user can set parameters via an I2C controller in the AMC523 FPGA, allowing the user to work over a wide dynamic range. (Note that the module is designed for gain settings to be set between bursts of data samples, not during data acquisition.)

The AMC523, MRT523 and MZ523C in combination have the ability to store calibration data and correct, on a channel by channel basis, for offset, gain, bandwidth and non-linearity, so providing optimum performance.

The MZ523C complies with the MRT523 Mezzanine Interface Specification, which can be made available to research partners to allow them to develop their own application-specific mezzanine modules. Electrical connection to the MRT523 is via flexway cables and ZIF connectors for flexibility and ease of assembly.

VadaTech Incorporated • 198 N. Gibson Road, Henderson, NV 89014 • Tel: (702) 896-3337 • Fax (702) 896-0332
Email: info@vadatech.com • www.vadatech.com

BLOCK DIAGRAM

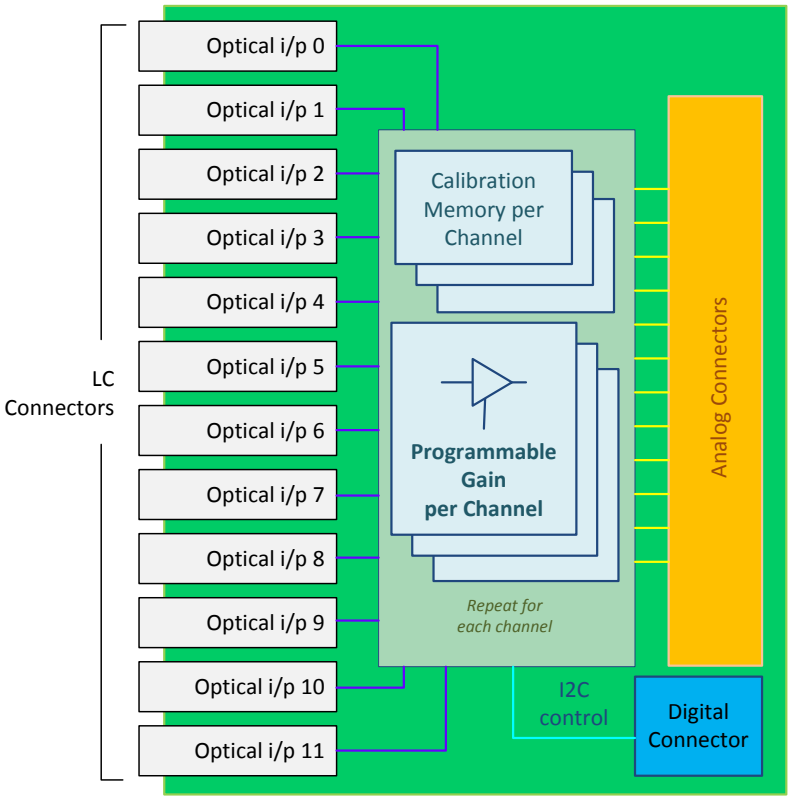

Figure 1: MZ523C Block Diagram

SPECIFICATIONS

Architecture		
Physical	Dimensions	Per MRT523 Mezzanine Interface Specification (available on request)
Type	RTM Mezzanine	12 optical detectors to ADC
Configuration		
Power	MZ523C	TBD
Environmental	Temperature	Operating Temperature: -5° to 45°C (55°C for limited time, performance restrictions may apply)
		Storage Temperature: –40° to +85° C
	Relative Humidity	5 to 95 percent, non-condensing
Rear Panel	Interface Connectors	12 LC connectors
	LEDs	None
Other		
MTBF	MIL Hand book 217-F @ TBD Hrs	
Certifications	Designed to meet FCC, CE and UL certifications where applicable	
Standards	VadaTech is certified to both the ISO9001:2000 and AS9100B:2004 standards	
Warranty	Two (2) years	

INTEGRATION SERVICES AND APPLICATION-READY PLATFORMS

VadaTech has a full ecosystem of ATCA and µTCA products including chassis platforms, shelf managers, AMC modules, Switch and Payload Boards, Rear Transition Modules (RTM), Power Modules, and more. The company also offers integration services as well as pre-configured Application-Ready Platforms. Please contact VadaTech Sales for more information.

Trademarks and Disclaimer

The VadaTech logo is a registered trademark of VadaTech, Inc. Other registered trademarks are the property of their respective owners. AdvancedTCA™ and the AdvancedMC™ logo are trademarks of the PCI Industrial Computers Manufacturers Group. All rights reserved. Specification subject to change without notice.

ORDERING OPTIONS

MZ523C – 00C – 000 – 00J

C = Front Panel *
1 = Reserved
2 = Reserved
3 = Reserved
4 = Reserved
5 = Mid-size
6 = Full-size

J = Temperature Range and Coating
0 = Commercial (–5° to +55° C), No coating
1 = Commercial (–5° to +55° C), Humiseal 1A33 Polyurethane
2 = Commercial (–5° to +55° C), Humiseal 1B31 Acrylic

* Front Panel size must match the host MRT523

RELATED PRODUCTS

AMC523
DAC Converter

VT811 MTCA.4
Chassis

MRT523 12-ch A/D Converter
RTM for AMC523

CONTACT US

VadaTech Corporate Office

198 N. Gibson Rd.
Henderson, NV 89014
Email: info@vadatech.com
Telephone: +1 702 896-3337
Fax: +1 702 896-0332

Asia Pacific Sales Office

7 Floor, No. 2, Wenhu Street, Neihu District
Taipei 114,Taiwan
Email: info@vadatech.com
Telephone: +886-2-2627-7655
Fax: +886-2-2627-7792

VadaTech European Sales Office

VadaTech House, Bulls Copse Road,
Southampton, SO40 9LR
Email: info@vadatech.com
Telephone: +44 2380 016403